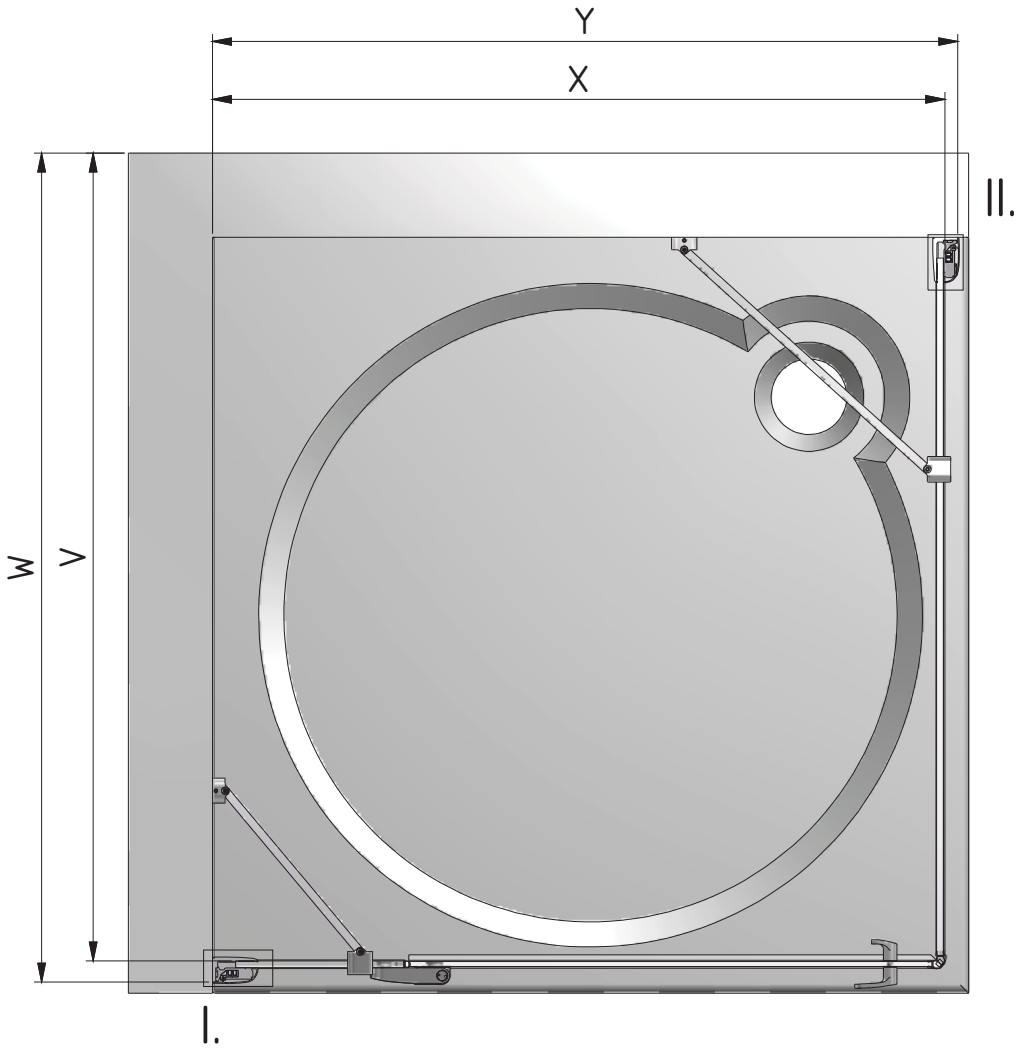

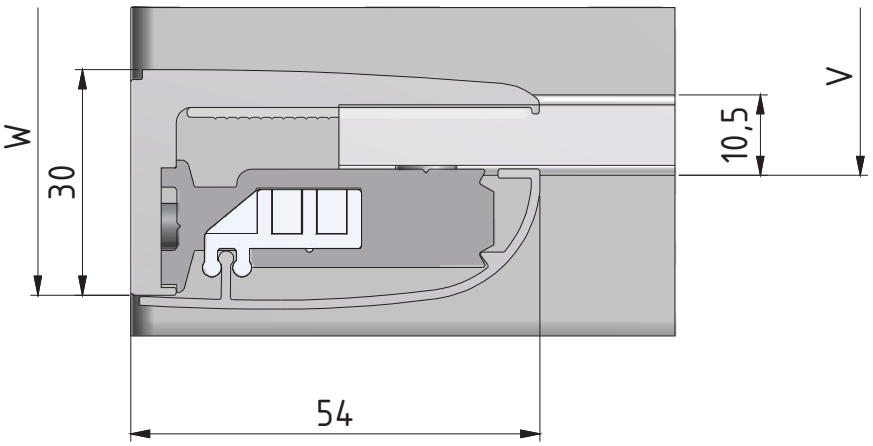

HBB

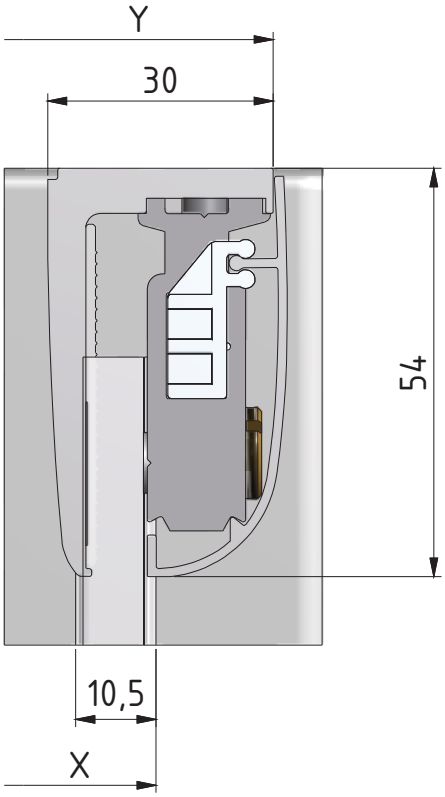

HBO

·	V (MIN-MAX)	W (MIN-MAX)	X (MIN-MAX)	Y (MIN-MAX)
800	752-777	770-795	752-777	770-795
900	852-877	870-895	852-877	870-895
1000	952-977	970-995	952-977	970-995
1100	---	---	1052-1077	1070-1095
1200	---	---	1152-1177	1170-1195